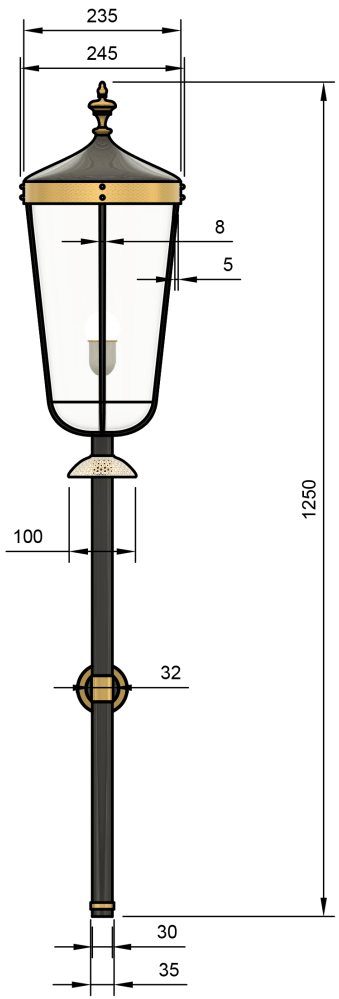

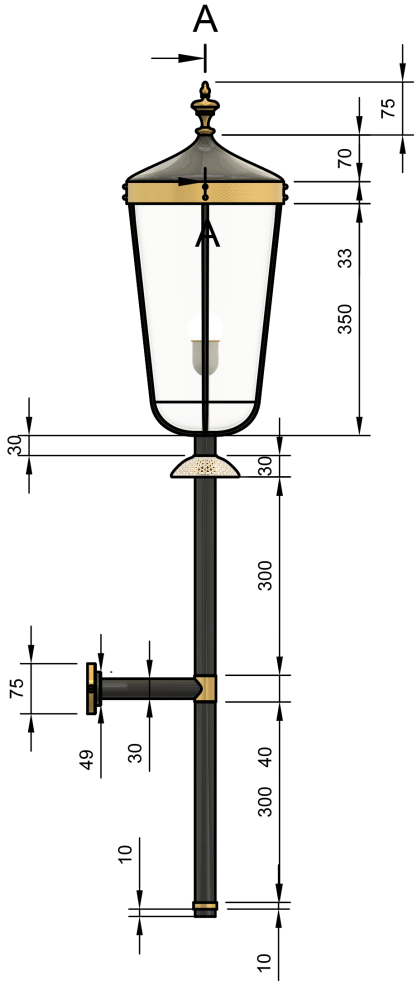

A-A echelle
1:4

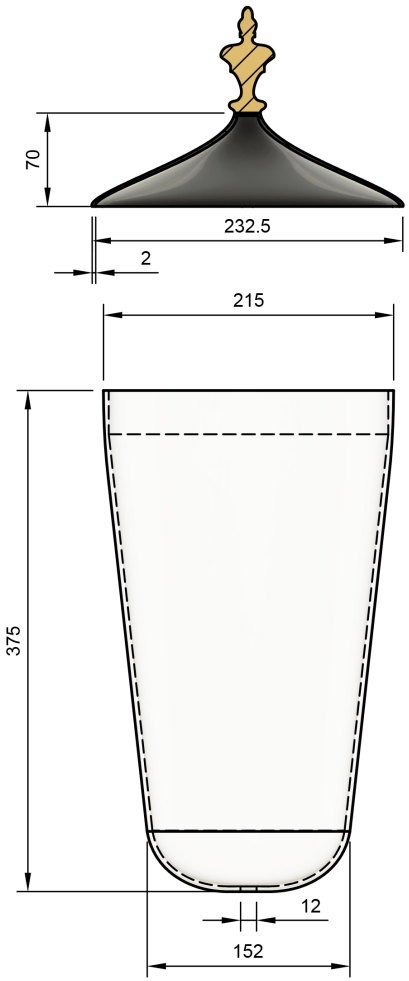

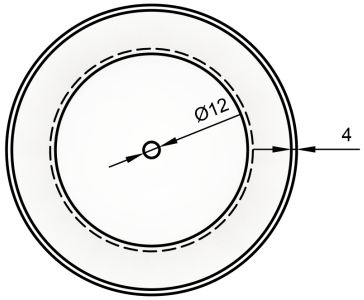

Dept.	Technical reference Ref 1112	Created by BAF 2020	Approved by
1930-1950		Document type R&D	Document status
		Title Torchere antique	DWG No.
			Rev. / Date of issue / Sheet 1/1